AR-130-CC (40/40mm Double Euro Profile Cylinder)

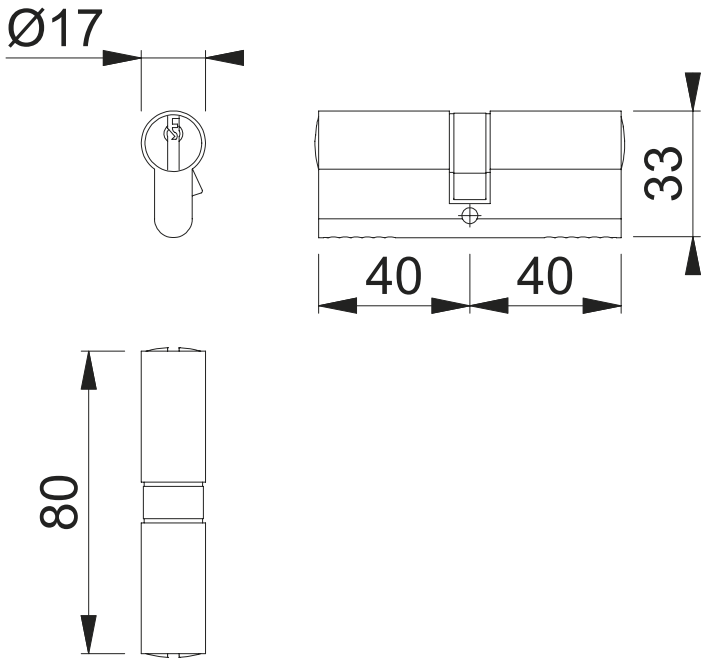

These documents are property of HOPPE (UK), Wolverhampton and are protected by both copyright and fair trade law. Any reproduction, reprint, copying, passing on to third parties and whichever use of these documents or parts thereof is prohibited, except with prior written consent of HOPPE.

Scale	Name	Date	Drawing No:	
1:2	J. Renhard	23.02.15	c1212016e001	ARRONE The Complete Range

Updated on 02.03.15 J.Renhard (Product Development)